Lesson 9 How to use DS1302 RTC module

Table

1. Understand DS1302 clock chip 2

2. Detailed explanation of DS1302 RTC module 3

3. What do you need to prepare 3

4. Wiring Circle 5

5. Set time to DS1302 module 8

5.1 Open the sketch 7_1_set_time_to_ds1302 8

5.2 Install the DS1302 library 10

5.3 Upload the code and run 10

6. Get real-time time and set to DS1302 module 11

6.1 Open the sketch 7_2_get_and_set_real-time_time 11

6.2 Install the Rtc_by_Makuna library 12

6.3 Upload the code and run 13

7. Any questions and suggestions are welcome 14

1. Understand DS1302 clock chip

DS1302, as a widely used RTC chip, was carefully launched by DALLAS company. This chip not only integrates real-time clock/calendar functions, but also comes with 31 bytes of static RAM, providing a convenient communication method for the microcontroller. Its simple and efficient serial interface design makes data transmission effortless. In addition, DS1302 has a powerful real-time clock function that can accurately calculate seconds, minutes, hours, days, dates, weeks, months, and years up to the year 2100, and has the ability to automatically adjust in leap years to ensure the accuracy of time display.

31X8 bit temporary data storage RAM provides sufficient data storage space.

Adopting a serial I/O port design minimizes the number of pins.

Wide range working voltage supports 2.0-5.5V, suitable for different power environments.

When reading and writing clock or RAM data, it supports single byte transfer and multi byte transfer of character groups, flexibly meeting data transmission requirements.

Dual power tube design provides assurance for the supply of primary and backup power.

The detailed pin arrangement and description are as follows:

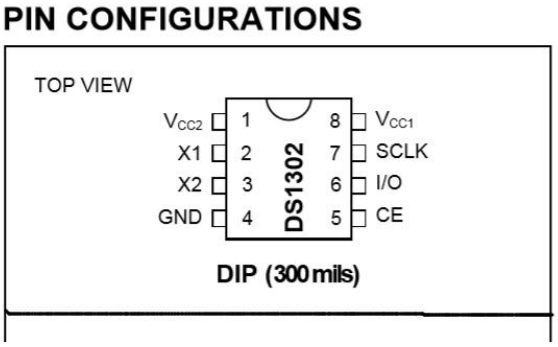

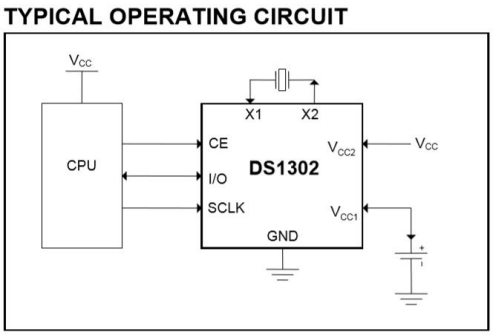

PIN DESCRIPTION PIN NAME FUNCTION

1：VCC2

Primary Power-Supply Pin in Dual Supply Configuration. VCC1 is connected to a backup source to maintain the time and date in the absence of primary power. The DS1302 operates from the larger of VCC1 or VCC2. When VCC2 is greater than VCC1 + 0.2V, VCC2 powers the DS1302. When VCC2 is less than VCC1, VCC1 powers the DS1302.

2 ：X1

3： X2

Connections for Standard 32.768kHz Quartz Crystal. The internal oscillator is designed for operation with a crystal having a specified load capacitance of 6pF. For more information on crystal selection and crystal layout considerations, refer to Application Note 58: Crystal Considerations for Dallas Real-Time Clocks. The DS1302 can also be driven by an external 32.768kHz oscillator. In this configuration, the X1 pin is connected to the external oscillator signal and the X2 pin is floated.

4： GND Ground

5： CE Input. CE signal must be asserted high during a read or a write. This pin has an internal 40k Ω (typ) pulldown resistor to ground. Note: Previous data sheet revisions referred to CE as RST. The functionality of the pin has not changed.

6： I/O Input/Push-Pull Output. The I/O pin is the bidirectional data pin for the 3-wire interface. This pin has an internal 40kΩ (typ) pulldown resistor to ground.
7：SCLK Input. SCLK is used to synchronize data movement on the serial interface. This pin has an internal 40kΩ (typ) pulldown resistor to ground.
8： VCC1
Low-Power Operation in Single Supply and Battery-Operated Systems and LowPower Battery Backup. In systems using the trickle charger, the rechargeable energy source is connected to this pin. UL recognized to ensure against reverse charging current when used with a lithium battery.

2. Detailed explanation of DS1302 RTC module

DS1302 RTC module, this highly integrated circuit board not only integrates DS1302 clock chip, but also comes with crystal oscillator and button battery, as well as external power supply and communication interface, as shown in the following figure:

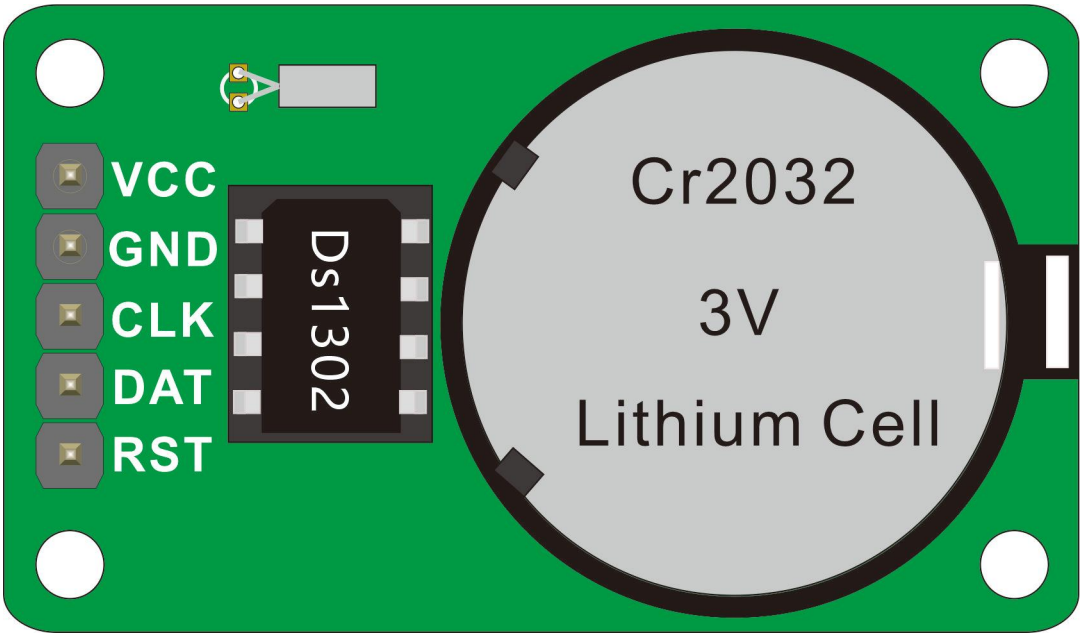

VCC and GND are connected to an external power source to supply power to the VCC1 pin of the DS1302 chip. CLK, DAT, and RST are the three wire serial external interfaces of DS1302, which facilitate communication with external microcontrollers. Microcontrollers (such as Arduino UNO R3) can enable DS1302 by setting the RST pin to a high level, providing a serial clock signal through the CLK pin, and then performing data read and write operations through the DAT pin.
The button battery serves as a backup power source to ensure that the clock can continue to run even when the system loses power.
If the DS1302 module is not time set, its initial time is 0:00 on 0, 0, 2001, and it can accurately calculate seconds, minutes, hours, days, dates, weeks, months, and years up to 2100.

3. What do you need to prepare

Components	Quantity	Picture	Remark

A to B USB cable	1		
Arduino UNO R3	1	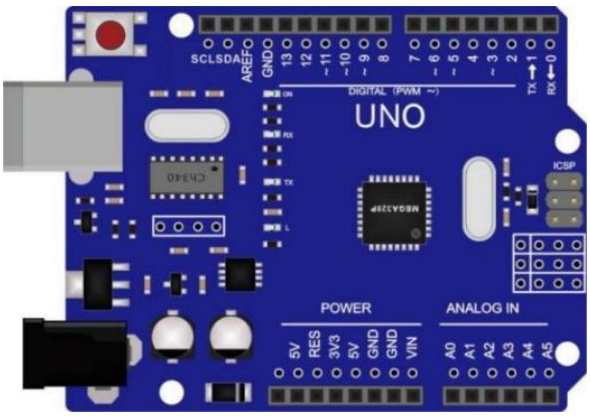	
Expansion board for Arduino UNO	1	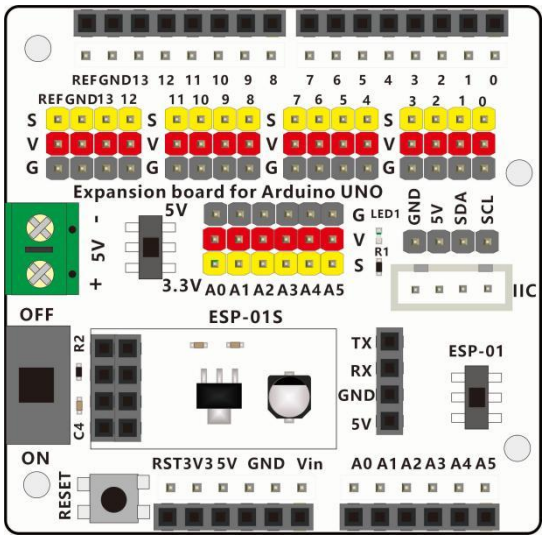	
DS1302 Module	1	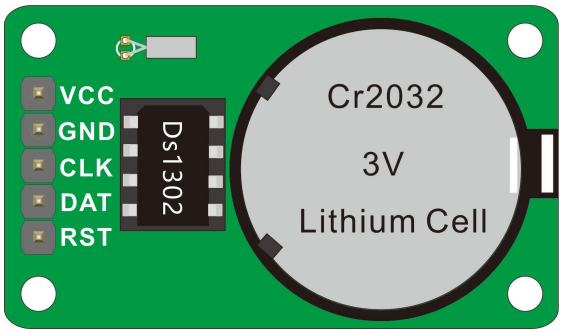	
1602LCD display module	1	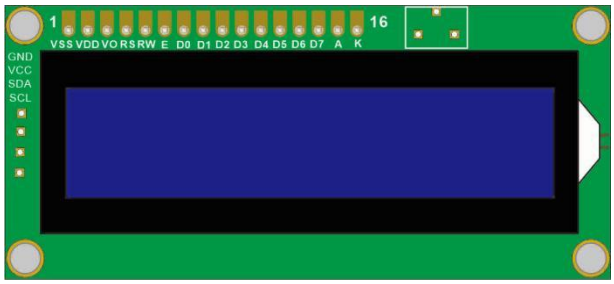	

5pin Female to Female dupont wire	1		
4 pin 2.54 spacing connecting wire	1		

4. Wiring Circle

Insert the Arduino UNO expansion board onto the Arduino UNO R3 board, paying attention to the assembly direction.As shown in the following figure:

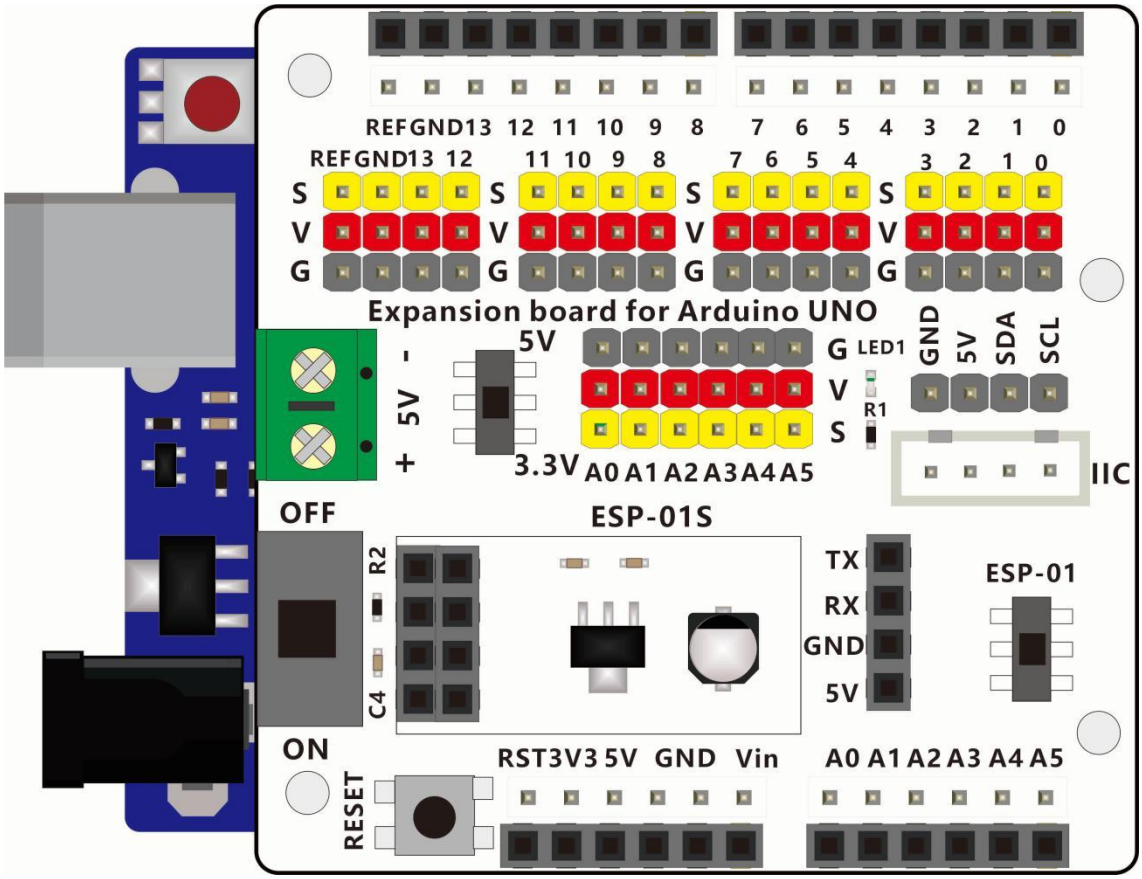

Turn the power switch on the expansion board to ON side and the 5V/3.3V switch to 5V side.
Connect the DS1302 RTC module to the Arduino UNO Expansion board using the 5 pin Female to Female dupont wires.
Connect the 1602LCD display module to the Arduino UNO Expansion board using the 4 pin wires.

Wiring between the DS1302 and the Arduino UNO expansion board		
pins of DS1302 RTC module	pins of the expansion board	Connection wire
VCC	V	Female-to-female 5-pin Dupont wire (one side integrated + one side separate) 150mm red, black, yellow, green, blue
GND	G	
CLK	7	
DAT	6	
RST	8	

Wiring between the 1602LCD module and the Arduino UNO expansion board		
pins of 1602LCD module	IIC port of Arduino UNO expansion board	Connection wire
GND	GND	1602 LCD connecting wire XH2.54 (reverse terminal) 170mm
VDD	5V	
SDA	SDA	
SCL	SCL	

The hardware connection diagram is as follows:

After connecting all hardware modules according to the instructions and diagram, check again to ensure there are no misconnections, especially to ensure that VCC and GND are not short circuited.

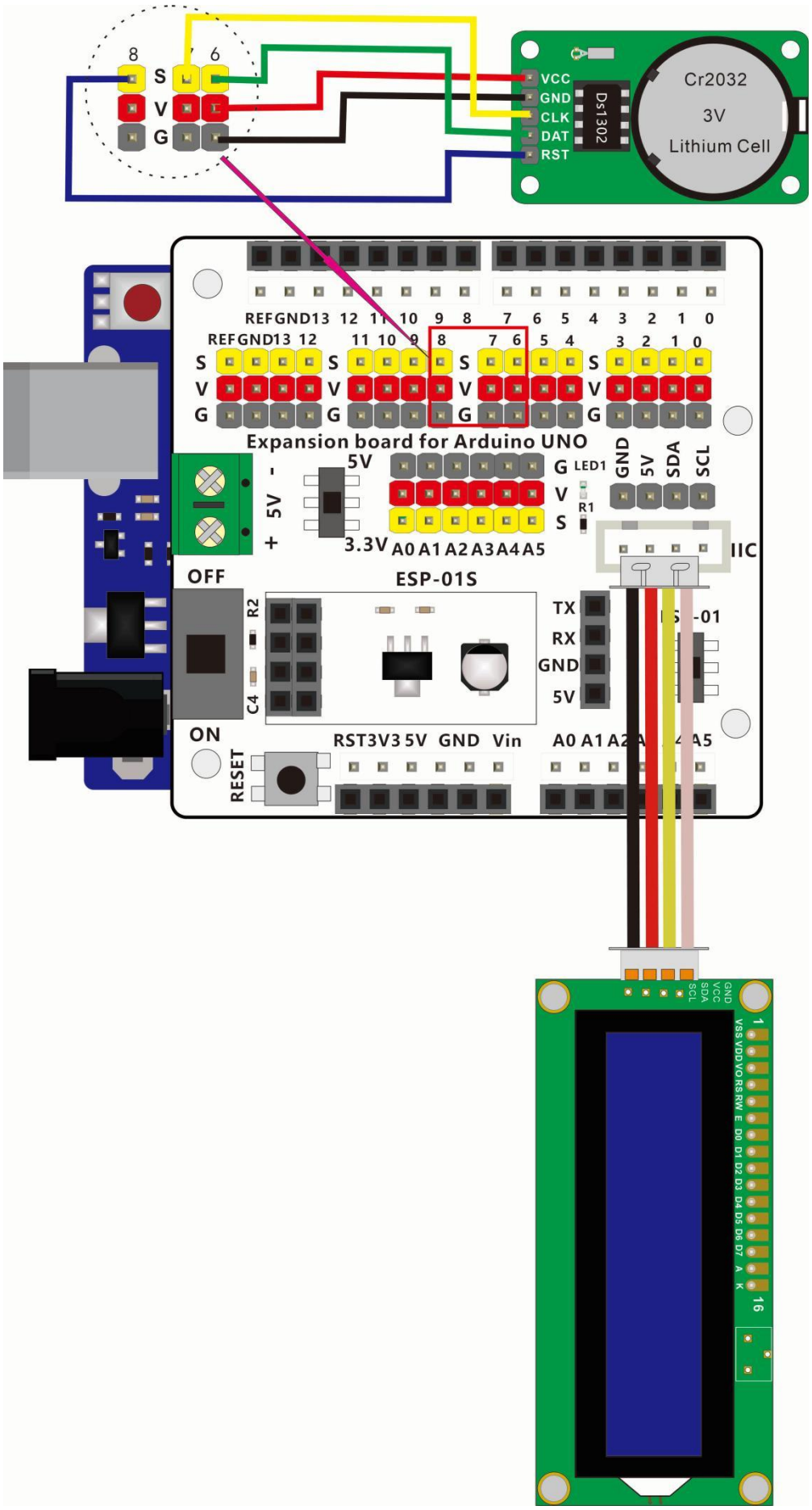
8
7
6
S
V
G
VCC
GND
CLK
DAT
RST
Ds1302
Cr2032
3V
Lithium Cell
REF GND 13 12 11 10 9 8 7 6 5 4 3 2 1 0
Expansion board for Arduino UNO
5V
3.3V
A0 A1 A2 A3 A4 A5
LED1
R1
GND
5V
SDA
SCL
IIC
OFF
ON
ESP-01S
R2
C4
TX
RX
GND
5V
RESET
RST 3V3 5V GND Vin
A0 A1 A2
A5
GND
VCC
SDA
SCL
VSS VDD V0 RS RW E D0 D1 D2 D3 D4 D5 D6 D7 A K
16

After the first trigger of a new DS1302 module, its default initial time is 0:00 on 0, 0, 2001.
We can write a set time to the DS1302 module according to our own needs (of course, this set time should be later than its default time), and then the DS1302 module will use the set time as the initial time and start timely.
We can also edit the code to establish a connection between the DS1302 module and Arduino UNO. During code compilation, DS1302 will obtain the real-time time of code compilation, and then use this time as the initial time to start timely.

5. Set time to DS1302 module

Let's set the time at **Tuesday, May 13, 2025 at 12:00:00.**

5.1 Open the sketch 7_1_set_time_to_ds1302

The sketch used in this lesson is placed in this folder：" E:\CKK0021-main\Tutorial\sketches"

Double-click the Arduino IDE shortcut on the desktop to open it

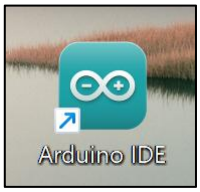

Click on the Arduino IDE interface toolbar"File" --- "open"

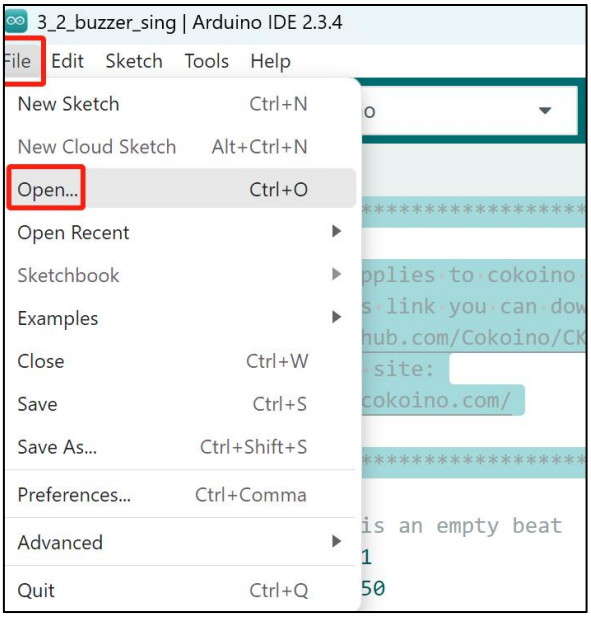

Select the sketch in the folder named 7_1_set_time_to_ds1302：
E:\CKK0021-main\Tutorial\sketches\7_1_set_time_to_ds1302,Then click "open".
The code interface after opening is as follows

7_1_set_time_to_ds1302.ino

```
  }
}
void setup() {
  Serial.begin(9600);
  // initialize the lcd
  lcd.init();
  lcd.backlight();
  lcd.clear();
  // Initialize a new chip by turning off write protection and clearing the
  // clock halt flag. These methods needn't always be called. See the DS1302
  // datasheet for details.
  rtc.writeProtect(false);
  rtc.halt(false);

  // Make a new time object to set the date and time.
  // Tuesday, May 13, 2025 at 12:00:00.
  // You can also change this time according to your own needs
  Time t(2025, 05, 13, 12, 00, 00, Time::kTuesday);

  // Set the time and date on the chip.
  rtc.time(t);
}

void printTime() {
  // Get the current time and date from the chip
```

Select the board "Arduino UNO"and Port "COM10" (COM port is commonly known as an input output port for a device normally PC which enables communication between Arduino and PC. You can check your arduino com number in device manager, the com port of our arduino board is recognized as COM10 in this tutorial)

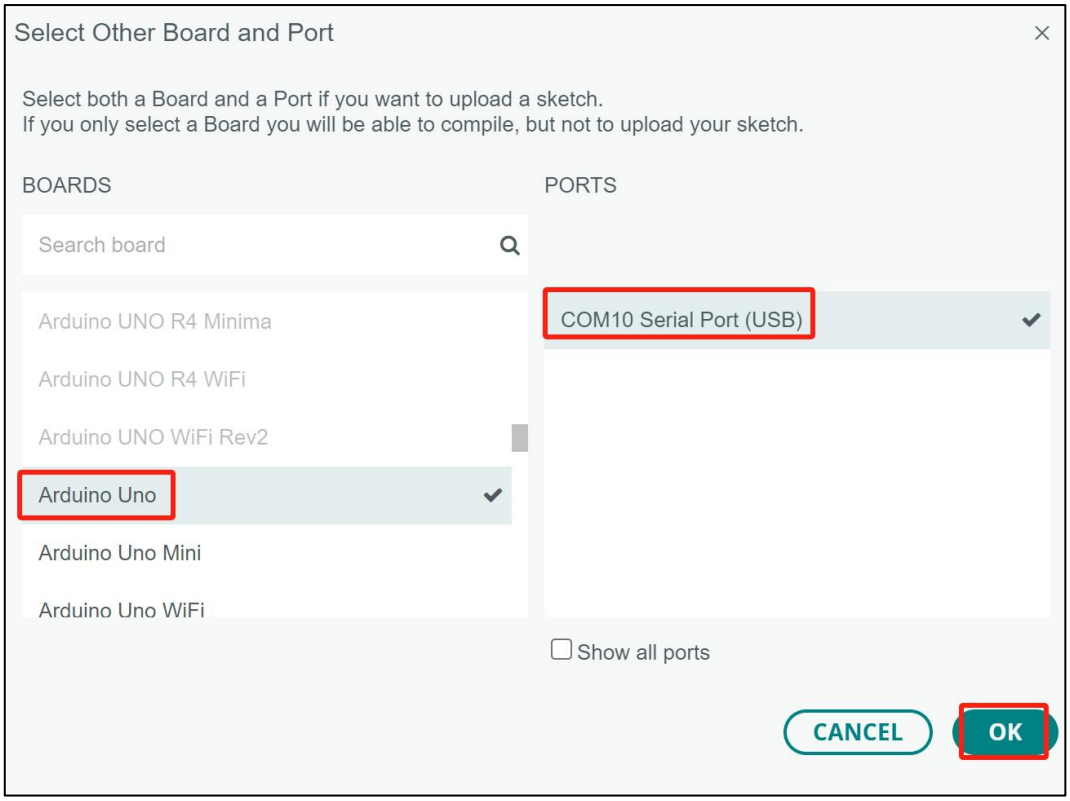

5.2 Install the DS1302 library

Please refer to the point 5 of Lesson 6 for library installation methods
"5. Install the Liquid Crystal Library"

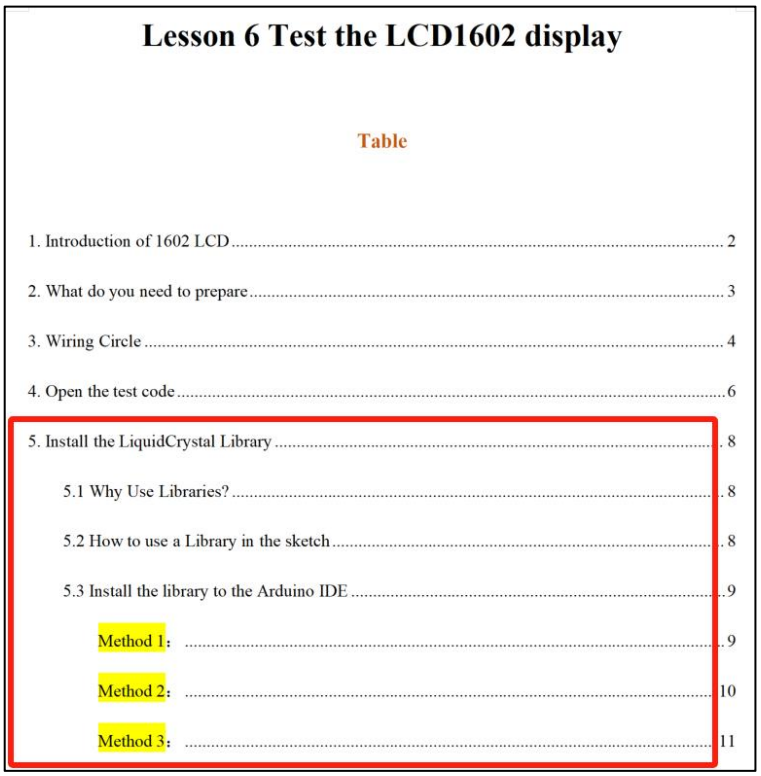

Lesson 6 Test the LCD1602 display

Table

1. Introduction of 1602 LCD 2
2. What do you need to prepare 3
3. Wiring Circle 4
4. Open the test code 6
5. Install the LiquidCrystal Library 8
5.1 Why Use Libraries? 8
5.2 How to use a Library in the sketch 8
5.3 Install the library to the Arduino IDE 9
Method 1: 9
Method 2: 10
Method 3: 11

5.3 Upload the code and run

Click compile button, successfully compiled the code will display "Done compiling"

Click upload button, successfully uploading the code will display "Done uploading". When code is uploaded successfully, the program starts to run.

You can see that the time **Tuesday, May 13, 2025 at 12:00:00** is displayed on the 1602LCD .
The first line of the 1602LCD displays "5-13-2025 3 ", 3 represents Tuesday
while the second line displays "12:00:00".

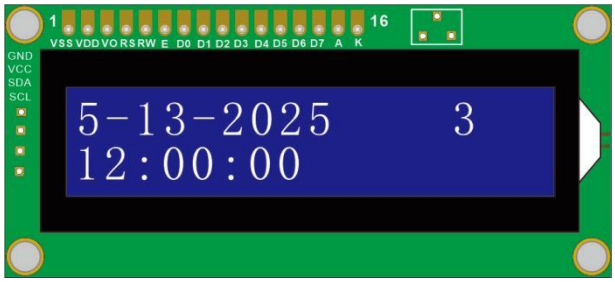

Then, the DS1302 module starts timing with this as the initial time. You can see that the digit representing the time in seconds on the 1602LCD starts to increase, starting from 00-01-02--03.....

6. Get real-time time and set to DS1302 module

6.1 Open the sketch 7_2_get_and_set_real-time_time

The sketch used in this lesson is placed in this folder：“ E:\CKK0021-main\Tutorial\sketches”

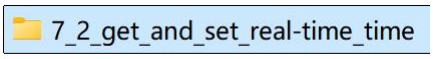

Click on the Arduino IDE interface toolbar "File" --- "open"

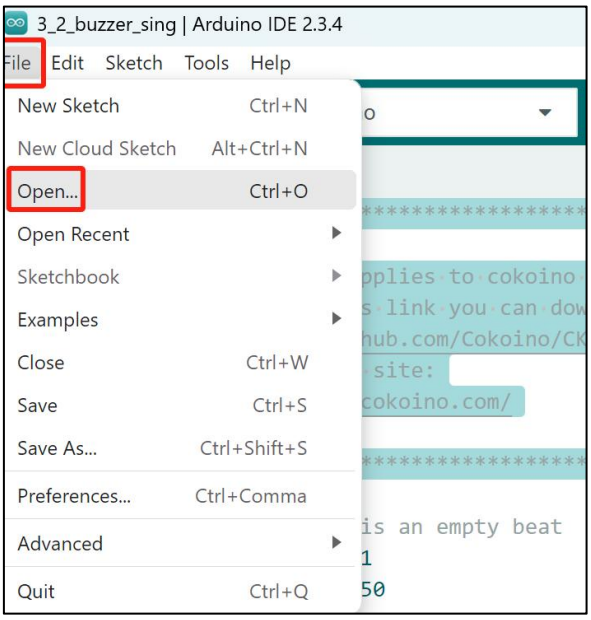

Select the code in the folder named 7_2_get_and_set_real-time_time：
E:\CKK0021-main\Tutorial\sketches\7_2_get_and_set_real-time_time,Then click "open".
The code interface after opening is as follows

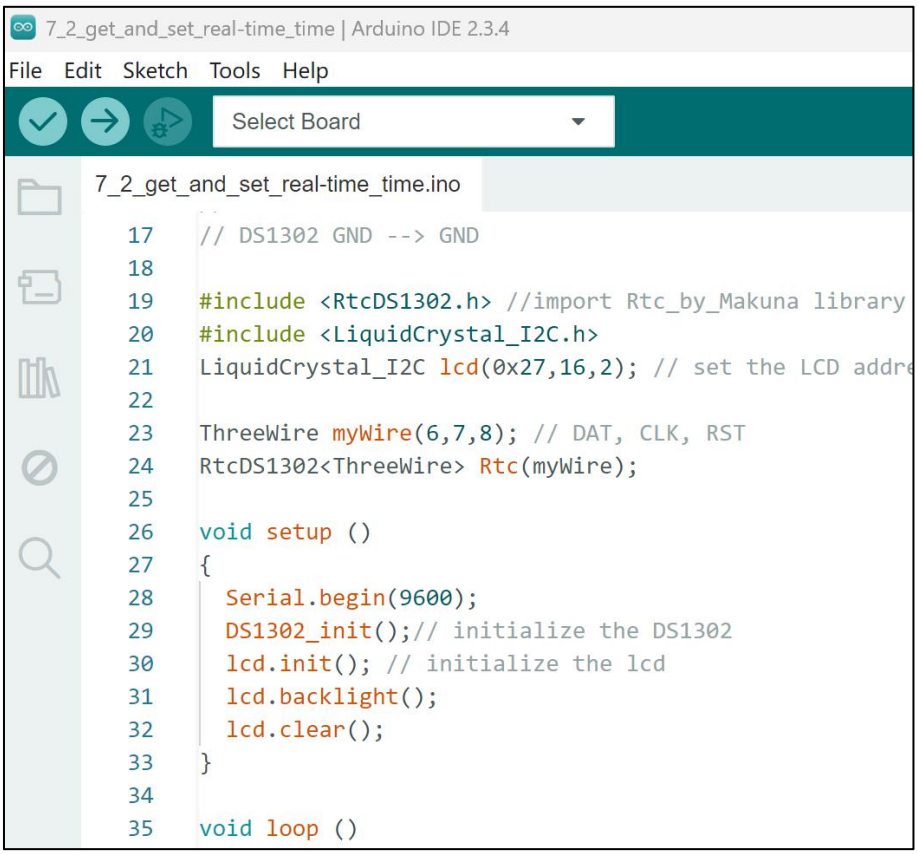

Select the board "Arduino UNO"and Port "COM10" (COM port is commonly known as an input output port for a device normally PC which enables communication between Arduino and PC. You can check your arduino com number in device manager, the com port of our arduino board is recognized as COM10 in this tutorial)

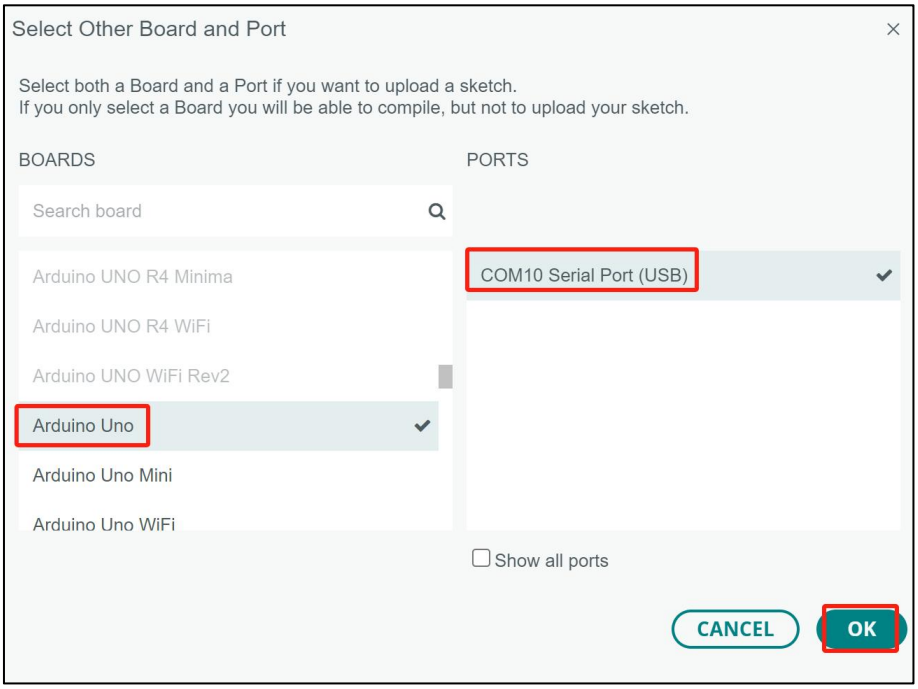

6.2 Install the Rtc_by_Makuna library

Please refer to the point 5 of Lesson 6 for library installation methods
"5. Install the Liquid Crystal Library"

Lesson 6 Test the LCD1602 display

Table

1. Introduction of 1602 LCD 2
2. What do you need to prepare 3
3. Wiring Circle 4
4. Open the test code 6
5. Install the LiquidCrystal Library 8
5.1 Why Use Libraries? 8
5.2 How to use a Library in the sketch 8
5.3 Install the library to the Arduino IDE 9
Method 1: 9
Method 2: 10
Method 3: 11

6.3 Upload the code and run

Click compile button, successfully compiled the code will display "Done compiling"

Click upload button, successfully uploading the code will display "Done uploading". When code is uploaded successfully, the program starts to run.

You can see that the real-time time displayed on the 1602LCD is consistent with the time on your computer, and it is updated in real-time.
The first line of the 1602LCD displays "Month-Day-Year", while the second line displays "Hour-Minute-Second".

As shown in the figure below, the 1602LCD displays the current time on my laptop, which is "July 16, 2025, 14:13:08".

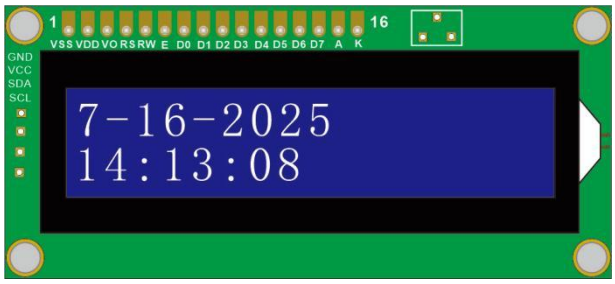

7. Any questions and suggestions are welcome

THANK YOU for participating in this Lesson 9 experience!

If you find any errors, omissions or you have suggestions and/or questions about this lesson, please feel free to contact us:

cokoino@outlook.com

We will make every effort to make changes and correct errors as soon as feasibly possible and publish a revised version.

If you want to learn more about Arduino, Raspberry Pi, Smart Cars, Robotics and other interesting products in science and technology, please continue to visit our Amazon Store by search for "**LK COKOINO**" on Amazon. Or visit our official website: **www.cokoino.com**
We will continue to launch fun, cost-effective, innovative and exciting products.

Thank you again for choosing Cokoino products.
LK COKOINO